ROHS

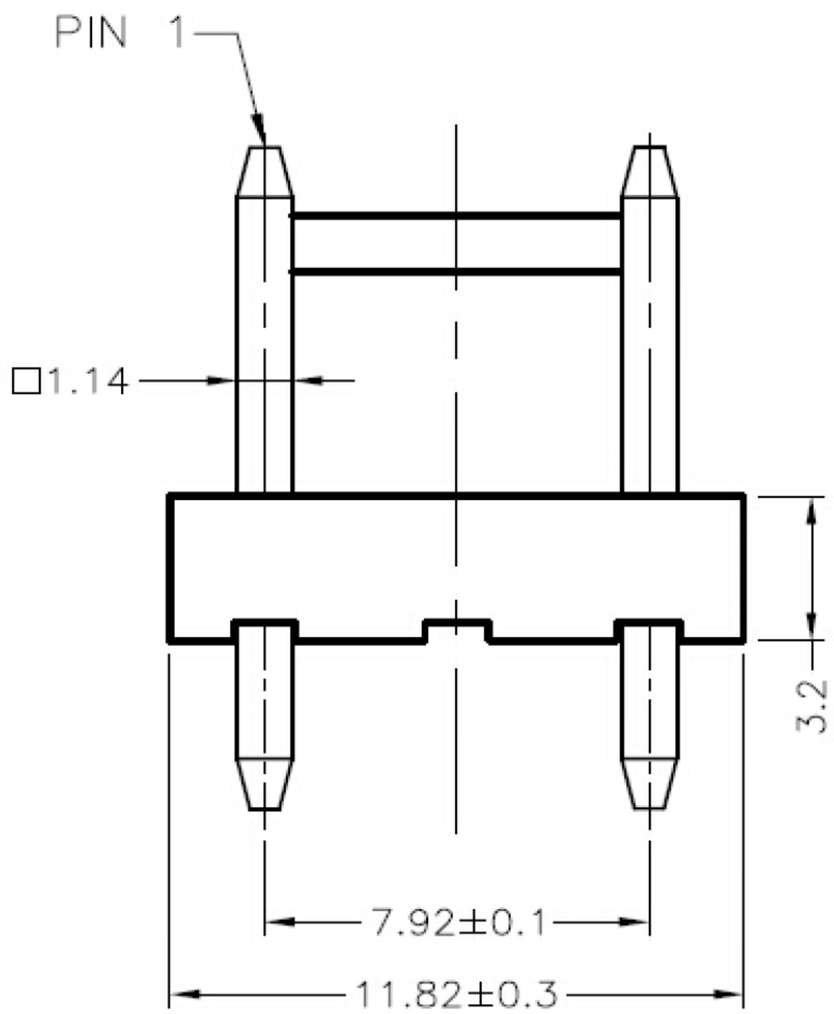

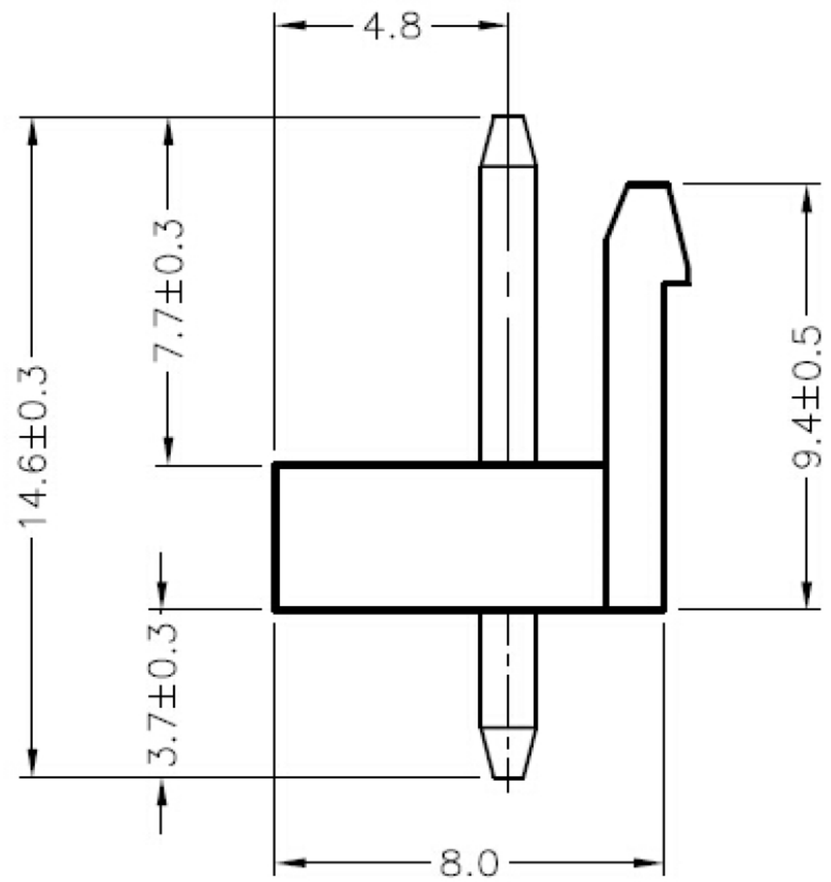

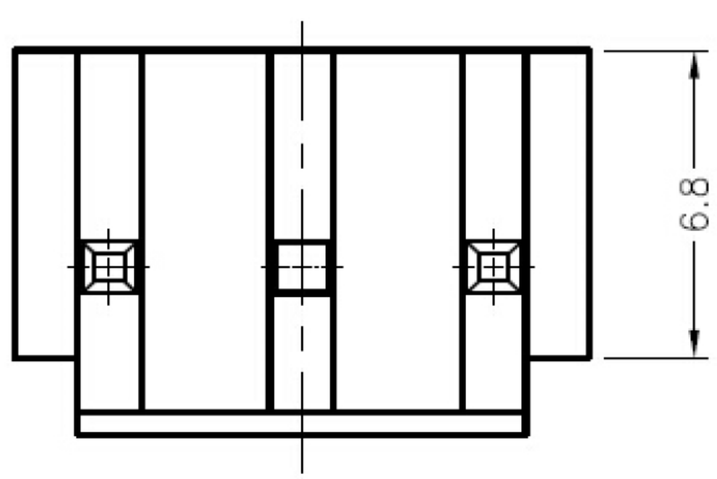

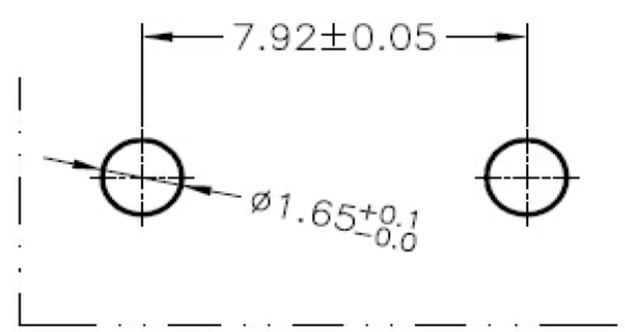

RECOMMENDED HOLE PATTERN

■ 技术参数 SPECIFICATIONS

- ◆ 适用线规: AWG.#18~#22
  Applicable Wire: AWG.#18~#22
- ◆ 额定电压: 250V DC/AC(rms)
  Rated voltage: 250V DC/AC(rms)
- ◆ 额定电流: 7A(AWG.#18)
  Rated Current: 7A(AWG.#18)
- ◆ 耐压值: 1500V AC/minute
  Withstand voltage: 1500V AC/min.
- ◆ 工作温度: −25°C ~ +85°C
  Working Temp : −25°C ~ +85°C
- ◆ 绝缘电阻: ≥1000 MΩ
  Insulation resistance: ≥1000 MΩ
- ◆ 接触电阻: ≤10 mΩ
  Contact resistance: ≤10 mΩ

■ 材料 MATERIAL

- ◆ 绝缘体: 尼龙66, UL94−V0
  Insulator: Nylon66, UL94−V0
- ◆ 接触针: 黄铜
  Finish: Tin−plating

ECN NO.	REV.	DATE.	DESCRIPTION.	CHANGE.	CHECK.	APPRO.
———	A	———	NEW	———	———	———

APPROVALS		DATE
DRAWN	ZHIWEI.CHEN	2015.07.07
CHECKED		
APPROVALS		

TOLERANCES ARE: 30~以上 ±0.30; 10~30 ±0.20; 5~10 ±0.15; ~ 5 ±0.10; ANGLE ±2°

深圳市联丰盈电子有限公司
SHENZHEN LINFENYING ELECTRONIC CO.,LTD

TITLE:	•••••• • • • • • •
PART NO.	GP01-3961WV-XP-2
UNIT: mm	SCALE: 1:1
PROJ:	
DRAWING NO.	———
SHEET 1 OF 1	